PTC
FAYAT GROUP

GROUND IMPROVEMENT

FOR STONE COLUMNS AND VIBROCOMPACTION



07-2025

PTC

PTC, a FAYAT Group company, is specialised in the design and manufacturing of equipment for ground improvement works: Vibrolances.

PTC's wide range of products and services allows us to answer all contractors' needs.

In complement to sales activities, PTC offers Vibrolances for rental.

INTRODUCTION 02

GROUND IMPROVEMENT TECHNIQUES 04

THE VIBROLANCE 06

1. VIBROCOMPACTION 08

2.1 STONE COLUMNS - TOP FEED 10

2.2 STONE COLUMNS - BOTTOM FEED 12

BFS18 VIBROLANCE VERSATILITY 14

POWER PACKS 16

AIR & WATER-JETTING 17

VIBCORDER 18











Innovative solutions for
GROUND IMPROVEMENT







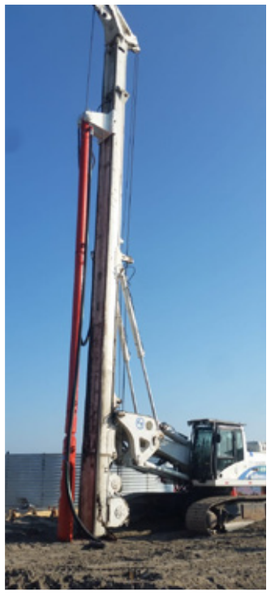



GROUND IMPROVEMENT TECHNIQUES

Different techniques for a qualitative and economical solution.







OVERVIEW

When land is reclaimed from the seabed or the in-situ soil does not fulfill the requirements of bearing capacity, lateral stability and liquefaction potential, ground improvement techniques with Vibrolance offer a qualitative and economical solution.

The PTC Vibrolance tool is adapted for a wide variety of ground conditions and can be carried out to almost any depth. The execution is fast and enables large volumes of soil to be improved, allowing subsequent structural works follow quickly.

Another advantage is the environmental friendliness, the soil is treated with natural materials, such as in-situ soil, stones or gravel, rather than with cement, bentonite or steel, used in other deep foundations methods.

LAND RECLAMATION
Treatment of soil reclaimed from the sea or lake, by dredging.

EARTHWORKS
Parkings, roads, railways, runways, dams.

MARINE / OFF-SHORE
Wharf caissons, seabed dredging.

BUILDING CONSTRUCTION
Industrial facilities, logistics platforms, oil tanks, malls.

1

VIBROCOMPACTION

This technique is used in granular soils. The Vibrolance produces vibrations to rearrange the soil particles of non-cohesive soils into a denser state.
The action of the Vibrolance, usually accompanied by water jetting, reduces the inter-granular forces between the soil particles allowing them to move into a more compact configuration.

2.1

STONE COLUMNS – TOP FEED

The column is built with stones that are added from the ground surface into the hole created by the Vibrolance. To do this, the Vibrolance must be withdrawn from the ground several times to allow the addition of the stones and re-inserted to assure the compaction.

2.2

STONE COLUMNS – BOTTOM FEED

The column is done with compacted stones that are fed from the bottom of the column (at desired depth), thanks to a stone feeding tube at the tip of the Vibrolance.

The choice of the best-adapted technique will be determined mainly by the type of soil and the soil's water saturation and bearing capacity requirements. The following graph illustrates the limits of application of the two main Vibrolance techniques: vibrocompaction and stone columns.

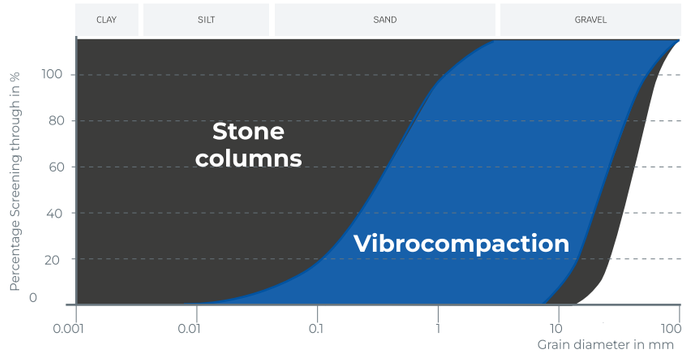

THE VIBROLANCE

Description, features and working principle.



1 DESCRIPTION

The Vibrolance is a cylindrical hydraulic vibratory system, composed of a vibrator, an isolator and extension tubes.

The vibrator contains an eccentric that continuously oscillates, generating radial vibrations. These vibrations are used to penetrate the ground and then to treat the soil, according to the chosen ground improvement technique (vibrocompaction or stone columns). Various extension tube lengths allow the Vibrolance to adjust to almost any treatment depth.

Thanks to the Vibrolance's modular design, the tool can match your soil improvement requirements.

2 WORKING PRINCIPLE

The eccentric in the vibrator generates radial vibrations. This vibrations, the pull down force (if it is mounted on a carrier) and the Vibrolance weight are used to penetrate the ground to the required treatment depth. The penetration can be assisted by water or air jetting at the tip of the Vibrolance.

During the extraction phase, the Vibrations of the Vibrolance are used to carry out the soil treatment, by agitating the soil particles and forcing then to rearrange in a denser state of compaction (vibrocompaction), and/or by compacting a pile of stones installed in the ground (stone column).

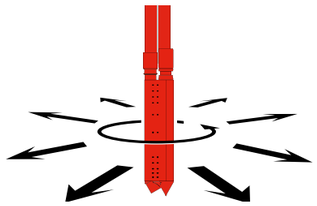

3 POWER SOURCE

When Vibrolances are used free hanging on a crane they are powered by a PTC Power Pack. When Vibrolances are mounted on rigs or excavators they can use the power source of the machine they are mounted on.



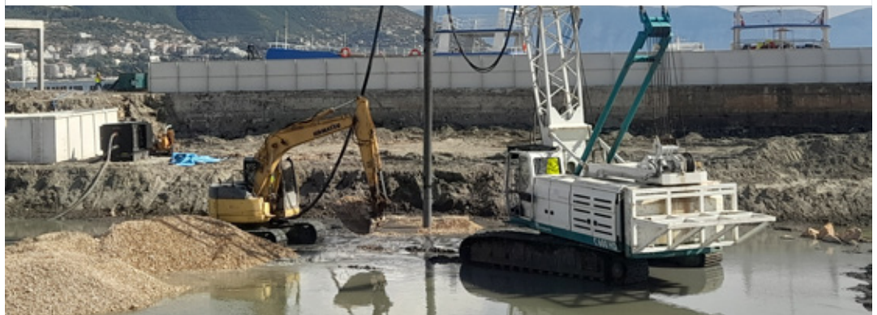

4 MODULARITY

By design, all elements are interchangeable and can work together in order to meet your application specificities.

Vibrocompaction : Different extension sections

Stone columns :

- stone tank in different stone storage capacity

- different extension feeder systems and lengths

- various attachement systems to adapt to most types of carriers

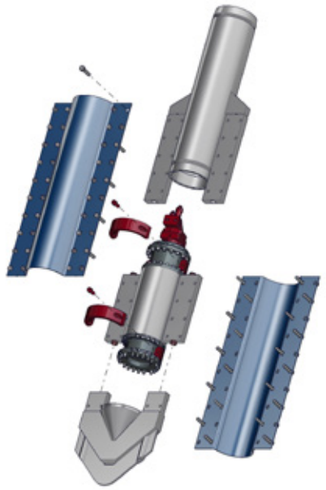

5 EASY MAINTENANCE

The Vibrolance weld-free design (full bolted system) allows for quick and easy disassembly and maintenance directly on site = time and cost savings for your production

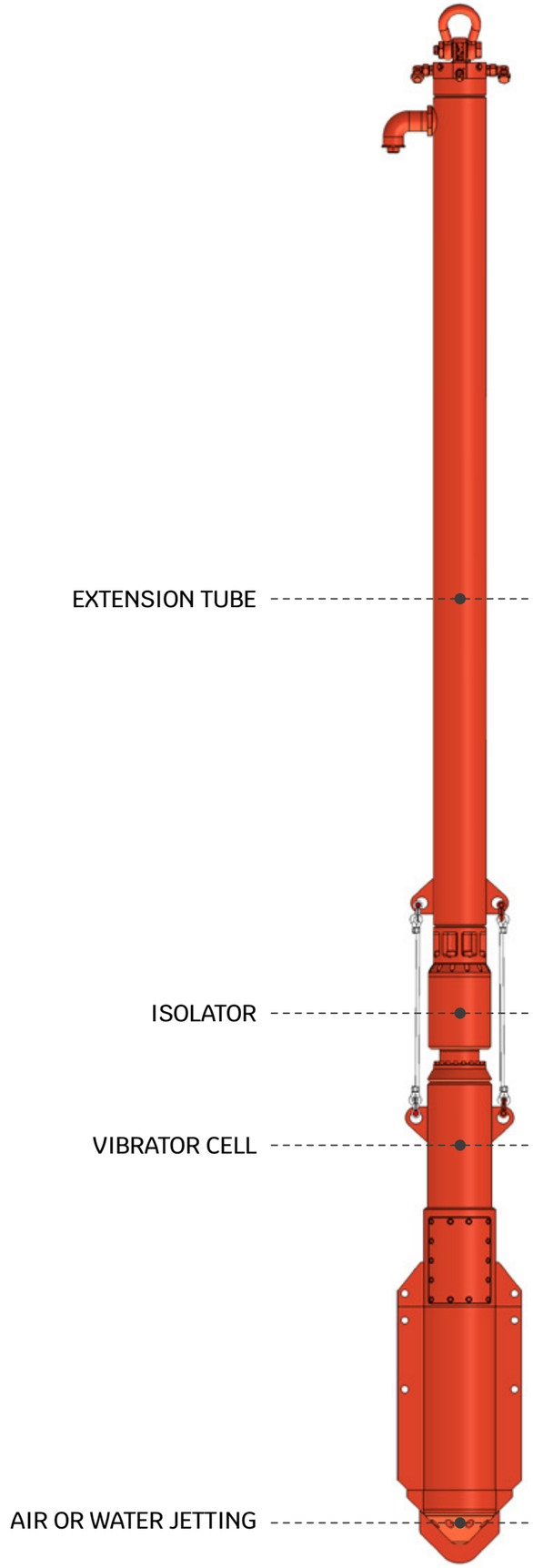

1. VIBROCOMPACTION

For land reclamation and sand compaction.

OVERVIEW

The Vibrocompaction technique is used in granular soils with limited fines content. This technique uses the Vibrolance sustained vibrations to rearrange the soil particles of non-cohesive soils into a denser state. The action of the vibrator reduces the inter-granular forces between the soil particles, allowing them to move into a more compact configuration.

MARINE / OFFSHORE

The Vibrocompaction can be used to compact the seabed, thanks to the extension tubes that can be adapted to the PTC Vibrolances to work under water for almost any treatment depth. Particularly interesting for reclaimed lands.

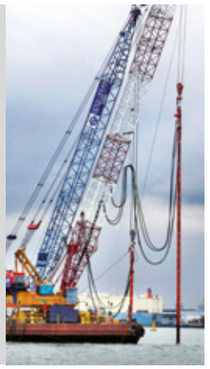

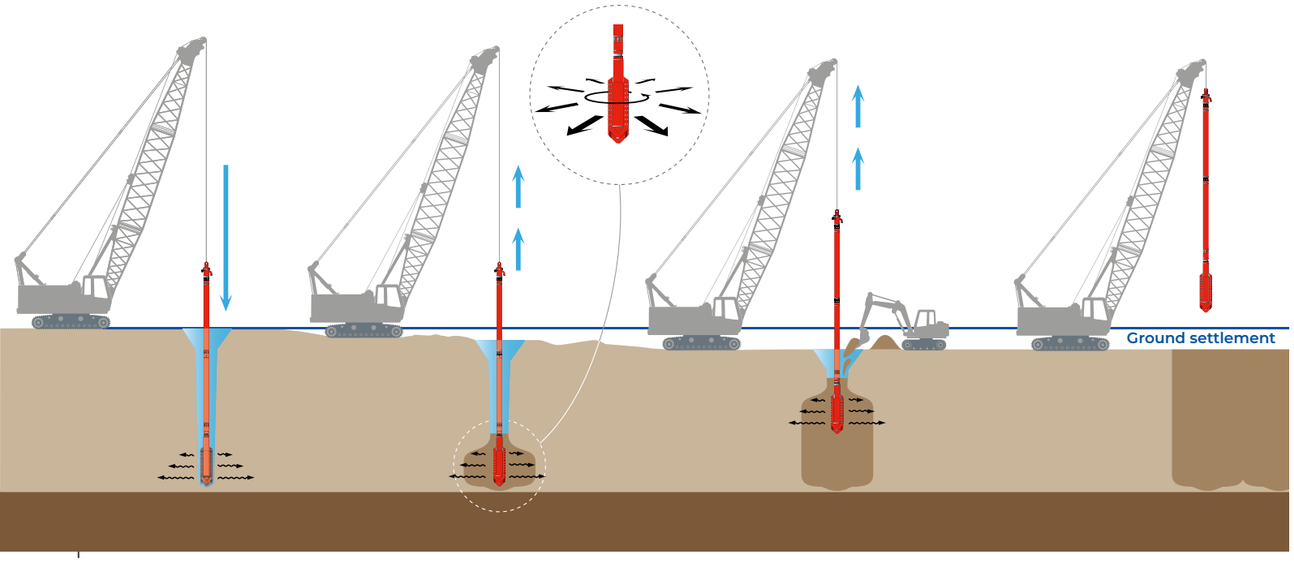

PENETRATION

The PTC Vibrolance penetrates the reclaimed grounds thanks to the combined effect of the vibrations emitted by the vibrator and the Vibrolance own weight.

The penetration is usually assisted by a water jetting system at the tip of the Vibrolance. By vibration and flushing of water and/or air, the Vibrolance penatrates to the desired depth.

COMPACTION

Once at depth the Vibrolance performs a series of compaction sequences step by step for extraction, starting from the bottom and upwards.

During compaction, the sustained vibrations agitate soil particles and force it to rearrange to a denser state of compaction.

Side water jetting may be used to facilitate the extraction of the Vibrolance when the penetration depth surpasses 20m.

CRATER BACKFILLING

The densification of the soil lowers the surface level and forms a crater at the top of the Vibrolance insertion point. This gap can be backfilled during the compaction process, either with imported or in-situ material, which is added to the Vibrolance insertion point.

FINISHING

The compaction and backfilling process are repeated until the Vibrolance reaches the surface and is completely extracted from the ground.

The Vibrolance will be re-inserted in the ground at the next spot of the compaction grid, until the treated soil reaches the degree of compaction required.

The compaction of the soil causes a decrease of the volume of up to 10% (ground settlement).

VIBROLANCE VL18 - VL40 - VL110

The PTC Vibrolance tool comes into three different power ranges to fit the requirements of your application.
Different mounting attachments are proposed for adaptation to the contractor's jobsite carrier.

		VL18	VL40	VL110
TECHNICAL DATA				
Hydraulic power	kW / HP	110 / 150	175 / 238	196 / 266
Eccentric moment	kg.m	1.8	4	11.2
Operational frequency	Hz / rpm	Up to 50 / 3 000	Up to 40 / 2 400	Up to 28 / 1 680
Centrifugal force	kN	178	253	347
Oil flow	L/min	189	300	336
Max. pressure	bar	350	350	350
Total weight (with one 5-m extension tube)	kg	2 550	3 200	4 425
OTHER				
Stone column diameter	mm	350 - 600	400 - 700	450 - 800
Treatment depth (with one extension tube)	m	3 - 8	3 - 8	3 - 8
OPTIONS				
5-meter extention	kg	1 100	1 100	1 100
Max. treatment depth / No. of extensions	m / No.	18 / 2	23 / 3	33 / 5
Air or water-jetting		●	●	●
Air compresor 10 bat - 145 psi	m^3 / min	11.5	11.5	11.5
Waterpump unit 15 bar - 217 psi	m^3 / h	70	70	70
Maintenance kit - 1 000 h		●	●	●
Tandem kit		●	●	●
TYPE				
Excavator-mounted (E)		●	●	
Free-hanging (F)		●	●	●



2.1 STONE COLUMNS – TOP FEED

Top feed method.

OVERVIEW

Stone columns are a soil replacement technique recommended for cohesive saturated soils. This technique consists in carrying out into the ground compacted stone columns made from coarse gravel, crushed stone or crushed aggregate, following a grid pattern previously determined by a test trial.

With the top feed method, the column is made with stones that are poured from the ground surface into the hole created by the Vibrolance.

MARINE / OFFSHORE

Top feed stone columns can be installed under water. For this application the most commonly used method is to install a blanket of gravel on the seabed. Afterwards, the Vibrolance penetrates the water, the gravel blanket, and finally the seabed at desired depth. The gravel is pushed down to the hole created by the Vibrolance, and forms a stone column.

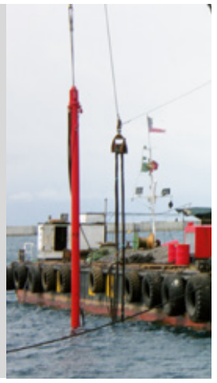

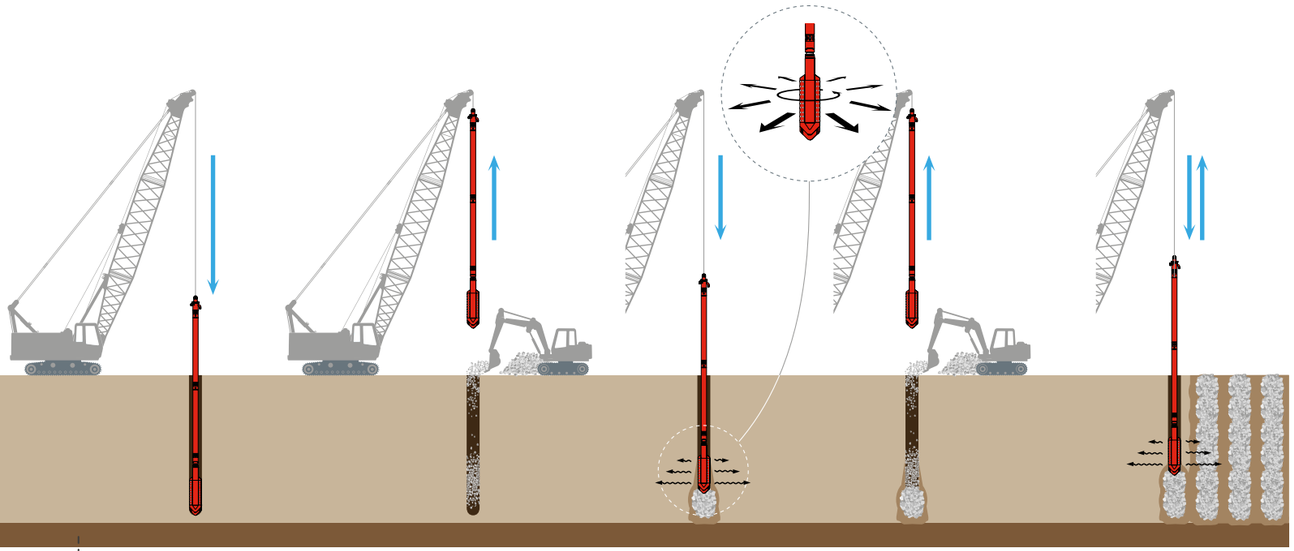

PENETRATION

The PTC Vibrolance penetrates the ground to form the hole, thanks to the combined effect of the vibrations emitted by the vibrator and the Vibrolance own weight.

The penetration can be assisted by air or water jetting at the tip of the Vibrolance.

STONE-FEEDING

When the Vibrolance reaches the required depth, stones (coarse gravel, crushed stone or crushed aggregate) are poured into the hole from the ground surface.

COMPACTION

The Vibrolance is lifted and lowered while gravel is injected and compacted in steps from the bottom upwards to the surface.

The stone vibration is applied until the required data stone columns is reached (diameter and density). The Vibrolance is then withdrawn again in steps to the surface level.

FINISHING

The stone feeding and compacting cycles are repeated until a column of very compact stones interlocked with the surrounding ground is built up to ground level.

The Vibrolance is then repositioned at the next spot of the grid pattern to start a new column.

VIBROLANCE VL18 - VL40 - VL110

PTC Vibrolance models can be used on vibro compaction as much as stones columns. The system 2 in 1 offers to its customer the most economical and adapted products on both solutions.

		VL18	VL40	VL110
TECHNICAL DATA				
Hydraulic power	kW / HP	110 / 150	175 / 238	196 / 266
Eccentric moment	kg.m	1.8	4	11.2
Operational frequency	Hz / rpm	Up to 50 / 3 000	Up to 40 / 2 400	Up to 28 / 1 680
Centrifugal force	kN	178	253	347
Oil flow	L/min	189	300	336
Max. pressure	bar	350	350	350
Total weight (with one 5-m extension tube)	kg	2 550	3 200	4 425
OTHER				
Stone column diameter	mm	350 - 600	400 - 700	450 - 800
Treatment depth (with one extension tube)	m	3 - 8	3 - 8	3 - 8
OPTIONS				
5-meter extention	kg	1 100	1 100	1 100
Max. treatment depth / No. of extensions	m / No.	18 / 2	23 / 3	33 / 5
Air or water-jetting		●	●	●
Air compresor 10 bat - 145 psi	m^3 / min	11.5	11.5	11.5
Waterpump unit 15 bar - 217 psi	m^3 / h	70	70	70
Maintenance kit - 1 000 h		●	●	●
Tandem kit		●	●	●
TYPE				
Excavator-mounted (E)		●	●	
Free-hanging (F)		●	●	●





2.2 STONE COLUMNS – BOTTOM FEED

Bottom feed method.

OVERVIEW

The stone columns are a soil replacement technique recommended for clayey, soft cohesive saturated soils. This technique consists in carrying out and compacting in the ground columns made from gravel or crushed stone.

The Bottom feed method, is used to produce high quality stone columns due to the fact that the stones are fed directly at the bottom of the hole created by the Vibrolance, up to the surface. This is possible thanks to a stone feeding tube at the tip of the Vibrolance. The vibration result combined with the pull-down force of the carrier offer advantages making this method the most reliable and productive for stone columns in small and large projects.

OFFSHORE

Stone columns using the bottom feed method can also be built in the seabed. A free hanging Vibrolance (BFS) equipped with a stone tube and a stone tank is required.



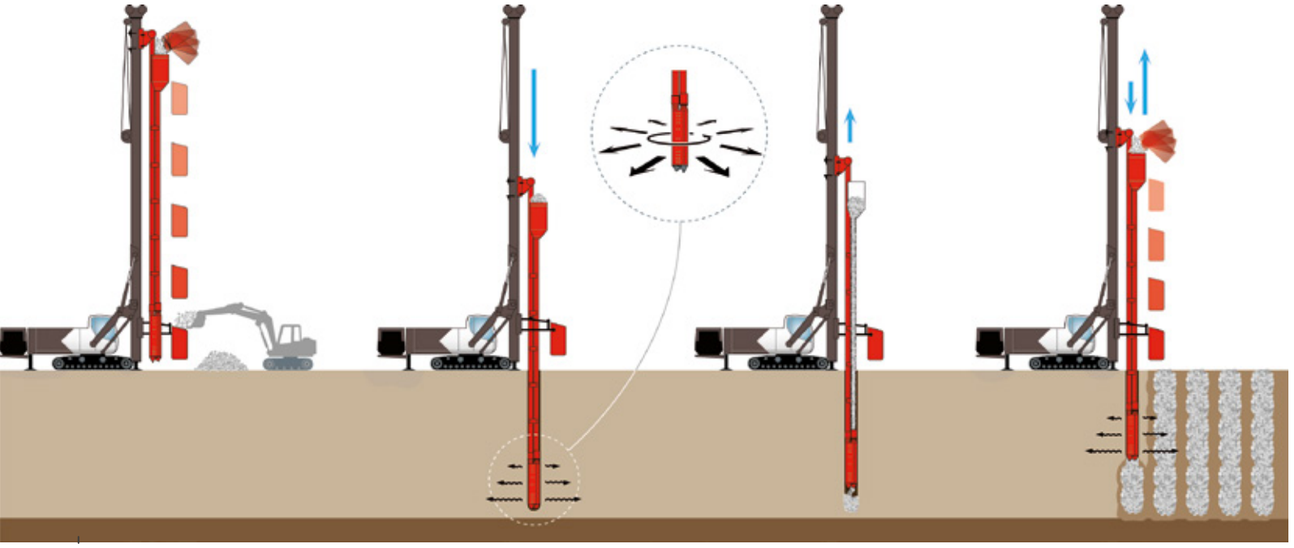

PENETRATION

The Vibrolance is positioned (with a lead system in this example, which must first be stabilized).

With the skip option, the latter is charged with stone, then travels up the leader and automatically discharges the stone into the upper tank.

Pressurised air pushes the stone through the feeding tube down to the Vibrator tip.

STONE-FEEDING

The Vibrolance penetrates the ground thanks to the combination of vibrations emitted by the vibrator plus the pull-down force of the carrier.

The penetration can be assisted by air jetting (optional).

COMPACTION

The Vibrolance is lifted and lowered while gravel is injected and compacted in steps from the bottom upwards to the surface.

The stone vibration is applied until the required data stone columns is reached (diameter and density). The Vibrolance is then withdrawn again in steps to the surface level.

FINISHING

The stone feeding and compacting cycles are repeated until a column of very compact stones interlocked with the surrounding ground is built up to ground level.

The Vibrolance is then repositioned at the next spot of the grid pattern to start a new column.

VIBROLANCE BFS18 - BFS40

Two Vibrolance models with Bottom Feed system offer a variety of working possibilities (Rig, Crane Excavator) for the production of stone columns.

		BFS18	BFS40
TECHNICAL DATA			
Hydraulic power	kW / HP	110 / 150	175 / 235
Eccentric moment	kg.m	1.8	4
Operational frequency	Hz / rpm	Up to 50 / 3 000	Up to 40 / 2 400
Centrifugal force	kN	178	253
Oil flow	L/min	189	300
Max. pressure	bar	350	350
Total weight	kg	1 820 (vibrator cell and isolators only)	13 950
OTHER			
Stone column diameter	mm	450 - 800	800 - 1 200
Treatment depth	m	3 - 19 (modular system)	8 - 18 (extension tubes)
OPTIONS			
Air-jetting		●	●
Air compresor 10 bar - 145 psi	m³ / min	11.5	11.5
Maintenance kit - 1 000 h		●	●
TYPE			
Excavator-mounted (E)		●	
Rig-mounted (R)		●	●





BFS18 VIBROLANCE VERSATILITY

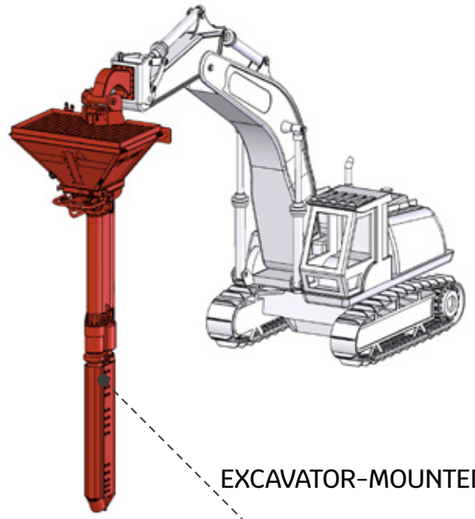

EXCAVATOR-MOUNTED

MODULAR SYSTEM

RIG-MOUNTED

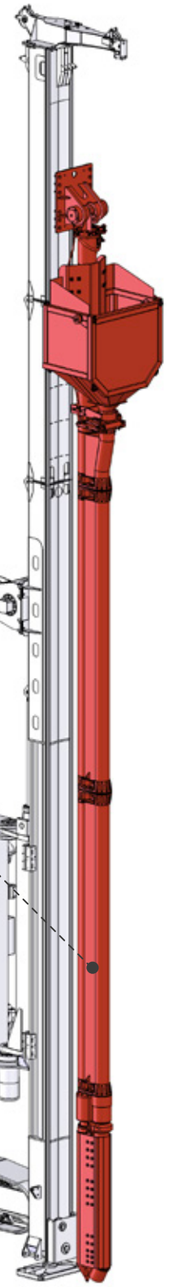

EXCAVATOR-MOUNTED EQUIPPED WITH A MAST

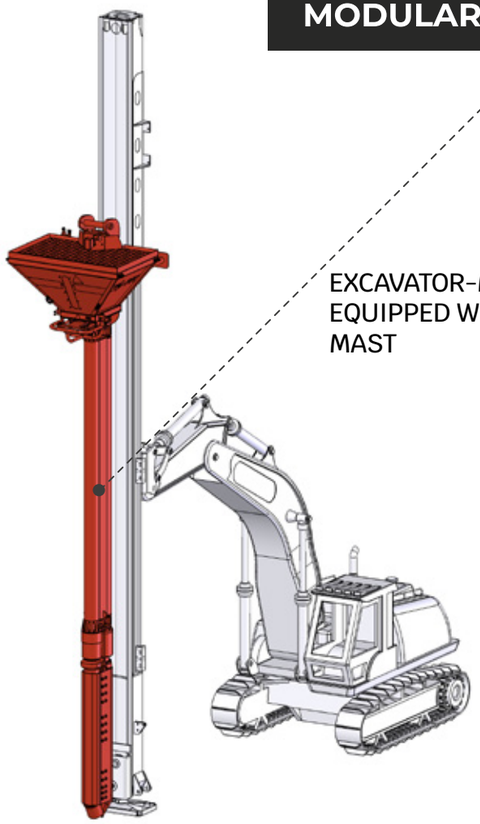

MODULAR SYSTEM

STONE TANK
(excavator-mounted version)

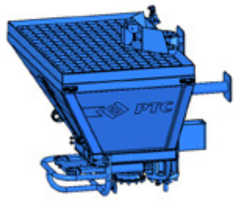

STONE TANK
(rig-mounted version)

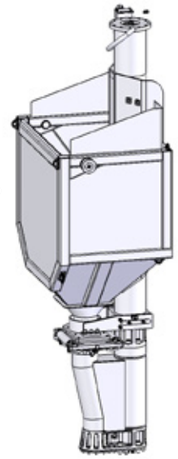

EXTENSION TUBES

5 m

4 m

2 m

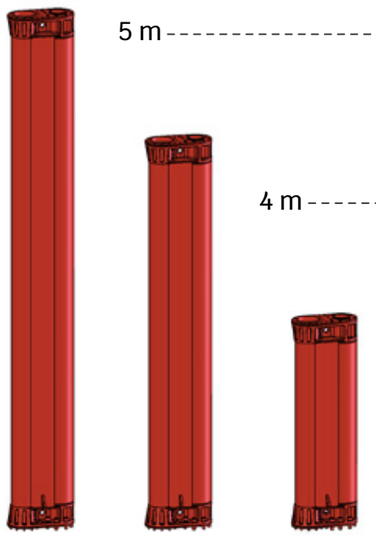

ISOLATOR

VIBRATOR



SKIP OPTION
(rig-mounted)

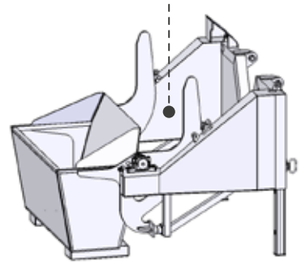

POWER PACKS

Complying with current environmental regulations.

		240VO	400VO	400CO	650VO	650CO
ENGINES						
Engine EU stage V - US EPA Tier 4f		Volvo TAD 582 VE	Volvo TAD 883 VE	Caterpillar C9.3B	Volvo TAD 1385 VE	Caterpillar C15
Engine power	kW / hp	160 / 215	235 / 315	250 / 335	405 / 543	403 / 540
Max. rotation speed	rpm	2 000	1 800	1 900	1 900	2 100
Engine EU stage IIIA - US EPA Tier 3		Volvo TAD 552 VE	Volvo TAD 582 VE	Caterpillar C9.3B LRC	Volvo TAD 1651 VE	Caterpillar C15
Engine power	kW / hp	160 / 215	235 / 315	250 / 335	430 / 577	403 / 540
Max. rotation speed	rpm	2 000	1 800	1 800	1 900	2 100
TECHNICAL DATA						
Nominal hydraulic flow	L / min	240	380	380	650	650
Max. hydraulic pressure	bar	350	350	350	350	350
Oil capacity	L	710	710	710	1 300	1300
Fuel capacity	L	600	600	600	1 350	1 350
Length	mm	3 500	3 500	3 850	4 800	4 800
Width	mm	1 600	1 600	1 600	2 000	2 000
Height	mm	2 150	2 150	2 015	2 400	2 305
Weight (with fuel)	kg	5 100	5 300	5 780	9 300	9 400
FEATURES						
Open loop circuit		Yes	Yes	Yes	Yes	Yes
ECOMODE		Yes	Yes	Yes	Yes	Yes
Quick couplings		Yes	Yes	Yes	Yes	Yes
Connecting hoses length	m	15 / 30 / 45 / 60	15 / 30 / 45 / 60	15 / 30 / 45 / 60	15 / 30 / 45 / 60	15 / 30 / 45 / 60
Connecting hoses weight	kg	125 / 250 / 375 / 500	175 / 350 / 525 / 700	175 / 350 / 525 / 700	325 / 650 / 975 / 1 300	325 / 650 / 975 / 1 300



AIR & WATER-JETTING

Complementary equipment for the Vibrolance.

Air or water-jetting are frequently used to assist the Vibrolance penetration in the ground. Their use will depend on the treatment depth and the type of ground improvement technique being applied.

When the soil treatment is done at important depths (generally more than 20 m), side water jetting is recommended to assist the extraction of the Vibrolance. Please consult PTC for advise on the type of jetting system that is best adapted to your application.

AIR-JETTING

SPECIFICATIONS FOR SELECTION OF AIR COMPRESSOR

Maximum airflow range	m^3 / min	9 - 12
Pressure range	bar	9 - 11

WATER-JETTING

SPECIFICATIONS FOR SELECTION OF WATER-JETTING PUMP

Operational water flow / pressure	m^3 / h	70 (at 15.5 bar)
Max. water pressure	bar	16
Fuel tank capacity	L	500







VIBCORDER

Monitoring system.

OVERVIEW

The Vibcorder is the monitoring system recommended for all PTC Vibrolances. It monitors in real time a variety of working parameters allowing to be sure to comply with the job site requirements.

The Vibcorder displays in real time:

• Soil compaction, through the reading of the Vibrolance pressure.

• Depth of the Vibrolance (in meters).

OPTIONAL PARAMETERS

• Stone consumption (cubic meters) and stone column profile (diameter of the stone column depending of the depth).

• Verticality of the Vibrolance (through the use of the inclinometer).

• Position of the Vibrolance (with the use of a GPS system). This parameter is especially useful for offshore projects where following a precise grid is needed.

DEPTH
It can be obtained through either a displacement or a hydrostatic sensor

VERTICALITY
Measured with an inclinometer.

GPS POSITIONNING
Position of the Vibrolance.

STONE COLUMN DIAMETER
Stone consumption sensor measures gravel consumption and gives the stone column profile.



Example of graph obtained on a jobsite with PTC Vibrolance (BFS):

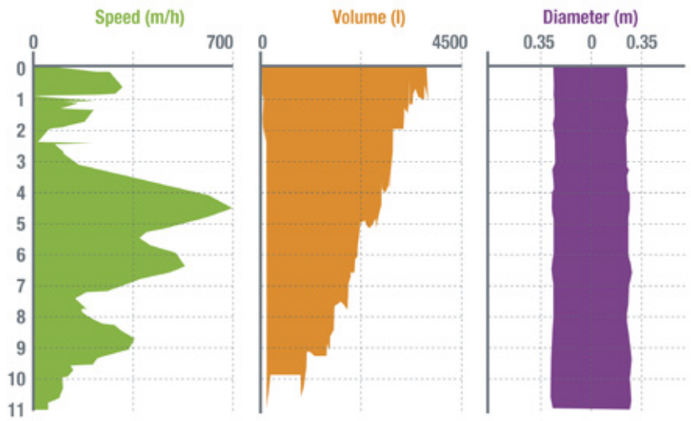



PTC.FAYAT.COM



Worldwide presence

PTC
56 rue de Neuilly
93130 Noisy-le-Sec
France
Tel. : +33 (0)1 49 42 72 95
contact@ptc.fayat.com
ptc.fayat.com

PTC FAR EAST
3 Tuas Avenue 16
638926 Singapore
Singapore
Tel. : +65 6861 7977
Tel. : +65 6861 6338
ptcfe@ptcfareast.com
ptc.fayat.com

PTC - Fayat Group

@PtcFayatGroup

@Ptc_Fayat

PTC FAYAT GROUP

CONTACT US!

Non-contractual document due to PTC's continuous improvement policy (03/2025)

PTC FAYAT GROUP

MADE IN