PTC
FAYAT GROUP

EXCAVATOR-MOUNTED VIBRODRIVERS

FOR PILE DRIVING AND EXTRACTING



03-2025

PTC

PTC, a FAYAT Group company, is specialised in designing and manufacturing equipment for deep foundations and shoring works solutions: vibrodrivers.

PTC's wide range of products and services allows us to answer all contractors' needs.

In complement to sales activities, PTC offers vibrodrivers for rental.

INTRODUCTION 02

JOB ANALYSIS 04

KEY ADVANTAGES 05

VARIABLE MOMENT TECHNOLOGY 06

WHICH RANGE TO CHOOSE? 07

RANGES 08
- ◇ PHFV range 10
- ◇ PHF range 12
- ◇ PH range 14

CLAMPING HEADS 16

CONTROL & CONNECTIONS 18

ACCESSORIES 19











Innovative solutions for
MANY APPLICATIONS













JOB ANALYSIS

A job in threefold: vibrodriver, pile and soil characteristics.



1 Yoke / Extraction box | **2** Vibrator gearbox | **3** Clamping head | **4** Pile

1 VIBRODRIVER

Principle: vibrodriver overcomes the soil resistance.

The vertical vibration eliminates temporarily the lateral friction between soil and pile. Thus allowing for easy pile driving or extracting by using either the equipment weight or the crane force.

In the vibrator, each eccentric pair turns at the same revolution speed in opposite directions, producing a vertical vibration. The eccentrics generate a centrifugal force f_c. The horizontal forces f_h are cancelled at the same time that the vertical components f_v are added, resulting in a total centrifugal force F_c. The yoke located above the gearbox prevents the transmission of vibrations to the crane, thanks to shock absorbers' design.

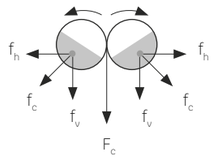

2 PILE

Our vibrodrivers work mounted on and powered by excavator. They can be used to drive a wide variety of profiles: sheet piles, H and I beams, casings and tubes, timber and pre-cast concrete piles.

- Sheet piles
- H & I beams
- Casings & tubes
- Timber piles
- Pre-cast concrete piles

3 SOIL CHARACTERISTICS

PTC has the expertise to support its customers for any soil investigation they might need. PTC will help and assist to select the best equipment in order to best match work configuration by studying soil technical data and the type of profile to be driven.

Important soil data are:

- Cohesive or non-cohesive soil
- Soil layers diversity
- Material properties
- Penetration depth



KEY ADVANTAGES

Qualities that guarantee the success of your jobs.

COMPACITY

- Ideal for piling jobs with reduced spaces and low head room (city centres).
- Minimal height to drive long profiles.
- So slim that it can drive in-between sheet piles.

EASY TO USE

The vibrodriver is powered by the excavator's hydraulic system, and the excavator's operator controls all parameters from the cabin.

RESONNANCE-FREE

Vibrodrivers equipped with PTC patented Variable Moment technology allow for:

- Adjustable amplitude at any time.
- Better control over pile verticality.
- Reach desired final depth with more accuracy.
- Adjustable driving speed.
- Work with low noise and vibratory nuisances.

CONNECTION CHOICE

Several connections are available to allow perfect adaptation to the number of circuits available on the excavator:

- Hydraulic control (PHF: 3 hoses / PHFV: 5 hoses).
- Flow limitor (PHF: 5 hoses).

POWERFUL & LIGHT

Vibrodrivers with very light weight and powerful eccentric moments.

CLAMPS ADAPTABILITY

PTC clamping heads can be mounted at 90° to allow face working.

Several clamps are available to adapt to any size and shape of profile.



VARIABLE MOMENT TECHNOLOGY

A PTC patented technology to better control vibrations.



MOMENT VARIABLE

VIBRATORY EMISSIONS DURING DRIVING

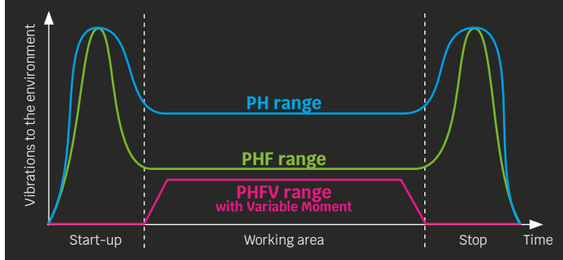

PATENTED TECHNOLOGY FOR PILE DRIVING WITH ADJUSTABLE AMPLITUDE THANKS TO THE VARIATION OF ECCENTRICS RELATIVE POSITIONS

- Vibration-free start-up and shut-down.
- Urban jobsites.
- Amplitude adjustment at any moment thanks to the variation of eccentrics.

The variation of the moment facilitates pile handling when driving:

- ◇ Better control over pile verticality.
- ◇ Desired final depth with more accuracy.
- ◇ Driving speed adjustment.

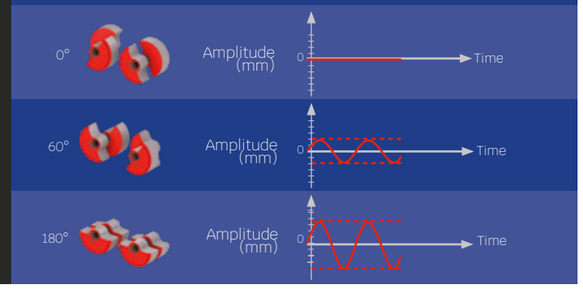

WHICH RANGE TO CHOOSE?

Perfect technical adaptation to your jobsite.

1 VIBRATION-SENSITIVE AREAS

If the piling works are in a city center and you want to control the vibration and the soil particle velocity, the range with variable moment technology is the best adapted (PHFV range). If you are working far from existing structures, you may use a vibrodriver with a fixed eccentric moment (PHF and PH ranges).

The type of soil and the profile parameters (height, weight, type of profile) will be key to determine the eccentric moment you require to drive the profile to the desired depth.

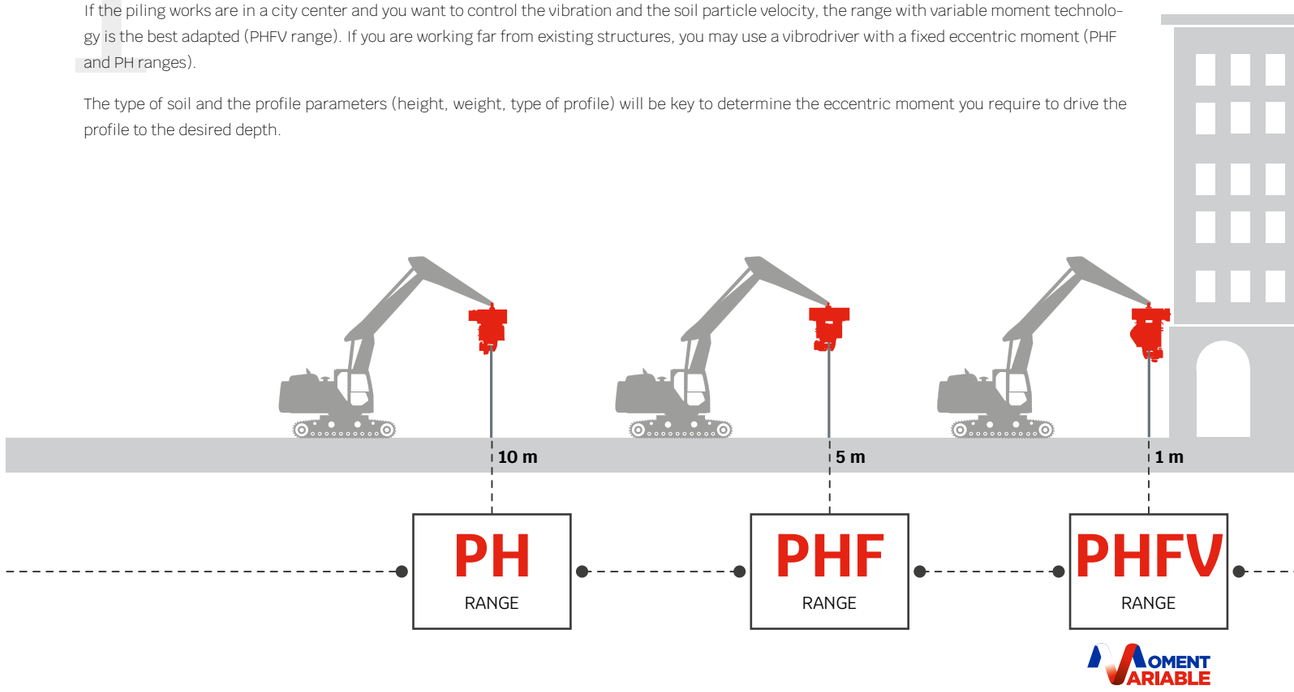

2 EXCAVATOR

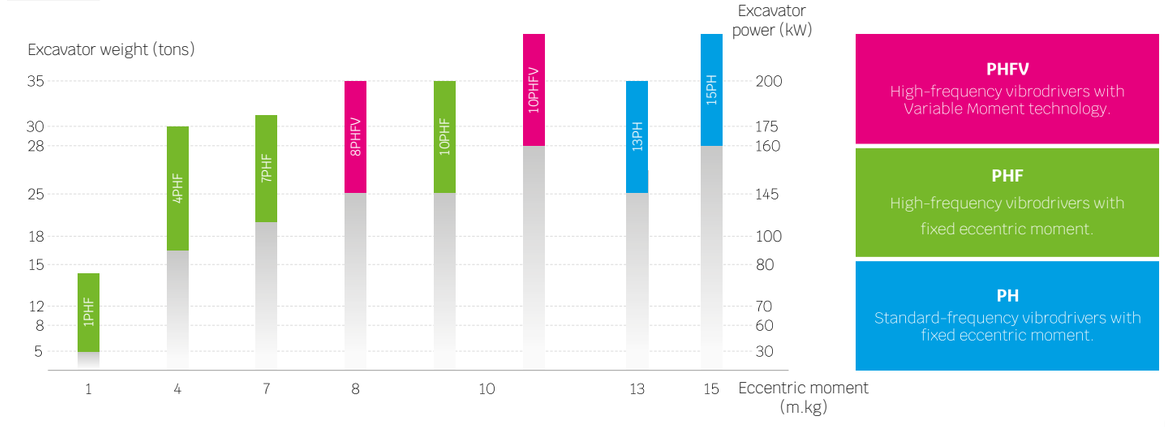

PHFV
High-frequency vibrodrivers with Variable Moment technology.

PHF
High-frequency vibrodrivers with fixed eccentric moment.

PH
Standard-frequency vibrodrivers with fixed eccentric moment.

VIBRODRIVERS RANGES



PHFV
RANGE

High-frequency and Variable Moment technology.
The PHFV range allows to adjust the amplitude at any time, thus it is highly recommended for “vibration-sensitive” applications: city centres, or near existing structures (bridges, railways, old houses, gas pipelines, etc.).

PHF
RANGE

High-frequency.
The PHF range can be considered in the absence of sensitive structures near the jobsite. Excavator-mounted vibrodrivers of the PHF range have a high-frequency, high-amplitude and a fixed eccentric moment.

PH
RANGE

Standard-frequency and fixed eccentric moment.
The most famous range of heavy-duty vibrodrivers in the world, known for their endless lifespan. This range is designed with hard-wearing materials and inside reinforcement for mechanically ultra-resistant vibrodrivers.
In spite of all this robustness, PH vibrodrivers have high-filtering capacities to absorb vibrations in order to protect excavators.

PHFV RANGE

High-frequency and Variable Moment technology.

The PHFV range allows to adjust the amplitude at any time, thus it is highly recommended for “vibration-sensitive” applications: city centres, or near existing structures (bridges, railways, old houses, gas pipelines, etc.).

VARIABLE MOMENT TECHNOLOGY

OPTIMUM COMPACTNESS

ADAPTED TO VIBRATION-SENSITIVE SITES

ADAPTED TO CRAMPED JOBSITES

		8PHFV	10PHFV
TECHNICAL DATA			
Eccentric moment	kg.m	0-8	0-10
Hydraulic power	kW/ch	108	120
Oil flow	L/min	185	205
Max. pressure	bar	350	350
Max. eccentric rotation speed	tr/min // Hz	39 // 2350	38 // 2300
Max. centrifugal force	kN	490	580
Max. line pull capacity	kN	130	245
Vibrating weight without clamp	kg	974	1020
Total weight without clamp	kg	1411	1620
Max. amplitude vibrodriver alone	mm	17	19
Length	mm	1310	1310
Width	mm	623	623
Center width	mm	345	380
Height without clamp	mm	1300	1466
RECOMMENDED CLAMPS			
Sheetpiles		Agriplex 60t	Agriplex 90t
Clamps total weight	kg	290	330
Clamps height	mm	479	484
Casings & tubes		2 clamps 42t with beam 1.2m	2 clamps 42t with beam 1.2m
Diameter min. / max.	mm	750	750
Clamps total weight	kg	250 / 1000	250 / 1000
Clamps height	mm	400	400
Concrete and wooden piles		Multigrip 60t	-
Clamps total weight	kg	780	-
ACCESSORIES & CONTROL			
Gooseneck stick		Yes	Yes
Custom-made fork attachment		Option	Option
Storage support		Yes	Yes
Flow limitor		Yes	Yes
Forced lubrication		Option	Option
Hydraulic control		Yes	Yes















PHF RANGE

High-frequency.

The PHF range can be considered in the absence of sensitive structures near the jobsite. Excavator-mounted vibrodrivers of the PHF range have a high-frequency, high-amplitude and a fixed eccentric moment.

OPTIMUM COMPACTNESS

ADAPTED TO BOTH RURAL & URBAN SITES

ADAPTED TO CRAMPED JOBSITES

		1PHF	4PHF	7PHF	10PHF
TECHNICAL DATA					
Eccentric moment	kg.m	0.7	4	6.5	10
Hydraulic power	kW/ch	20	67	85 | 105	108
Oil flow	L/min	35	115	145 | 180	185
Max. pressure	bar	350	350	350	350
Max. eccentric rotation speed	tr/min // Hz	50 // 3000	43 // 2600	38 // 2300	35 // 2100
Max. centrifugal force	kN	70	300	370	487
Max. line pull capacity	kN	25	60	130	130
Vibrating weight without clamp	kg	171	510	670	880
Total weight without clamp	kg	185	892	1140	1300
Max. amplitude vibrodriver alone	mm	8	16	18	23
Length	mm	480	1038	1175	920
Width	mm	430	620	608	734
Center width	mm	240	330	330	380
Height without clamp	mm	450	810	1018	1077
RECOMMENDED CLAMPS					
Sheetpiles		Agriplex 22t	Agriplex 60t	Agriplex 60t	Agriplex 60t
Clamps total weight	kg	85	290	290	290
Clamps height	mm	310	479	479	479
Casings & tubes		-	-	2 clamps 42t with beam 1.2m	2 clamps 42t with beam 1.2m
Diameter min. / max.	mm	-	-	750	750
Clamps total weight	kg	-	-	250 / 1000	250 / 1000
Clamps height	mm	-	-	400	400
Concrete and wooden piles		-	-	-	Multigrip 60t
Clamps total weight	kg	-	-	-	780
ACCESSORIES & CONTROL					
Gooseneck		-	-	Yes	Yes
Custom-made fork attachment		-	Option	Option	Option
Storage support		Yes	-	Yes	Yes
Flow limitor		Option	Yes	Yes	Yes
Forced lubrication		Yes	Option	Option	Option
Hydraulic control		-	-	-	-















PH RANGE

Standard-frequency and fixed eccentric moment.

The most famous range of heavy-duty vibrodrivers in the world, known for their endless lifespan. This range is designed with hard-wearing materials and inside reinforcement for mechanically ultra-resistant vibrodrivers.
In spite of all this robustness, PH vibrodrivers have high-filtering capacities to absorb vibrations in order to protect excavators.

LARGE INFRASTRUCTURES

EXTREME ROBUSTNESS

ADAPTED TO ANY JOB

TECHNICAL DATA		13PH	15PH
Eccentric moment	kg.m	13	15
Hydraulic power	kW/ch	114	123
Oil flow	L/min	195	210
Max. pressure	bar	350	350
Max. eccentric rotation speed	tr/min // Hz	31 // 1850	28 // 1680
Max. centrifugal force	kN	488	464
Max. line pull capacity	kN	130	245
Vibrating weight without clamp	kg	900	975
Total weight without clamp	kg	1290	1570
Max. amplitude vibrodriver alone	mm	29	31
Length	mm	920	1263
Width	mm	734	738
Center width	mm	380	380
Height without clamp	mm	1077	1301

RECOMMENDED CLAMPS			
Sheetpiles		Agriplex 60t	Agriplex 60t
Clamps total weight	kg	290	290
Clamps height	mm	479	479
Tubes		2 clamps 42t with beam 1.2m	2 clamps 42t with beam 1.2m
Diameter min. / max.	mm	750	750
Clamps total weight	kg	250 / 1000	250 / 1000
Clamps height	mm	400	400
Concrete and wooden piles		Multigrip 60t	Multigrip 60t
Clamps total weight	kg	780	780

ACCESSORIES & CONTROL		
Gooseneck	Yes	Yes
Custom-made fork attachment	Option	Option
Storage support	Yes	Yes
Flow limitor	Yes	Yes
Forced lubrication	Option	Option
Hydraulic control	-	-















CLAMPING HEADS

A wide range to match the variety of pile types and sizes.

1 AGRIPLEX

Clamping head for single or double sheetpiles, and H-beam. It manages space constraints perfectly. On top of its standard position, the Agriplex can work in cramped spaces, mounted perpendicular to the vibrodriver in a 90° position that allows to work almost flush against a wall (starting from 7PHF).

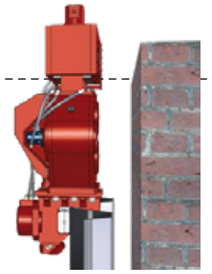

AGRIPLEX		22 t	60 t	60 t extended	90 t
WEIGHT	kg	85	290	300	330
CLAMPING FORCE	kN	203	603	603	860
CLAMPING PRESSURE	bar	320	320	320	320
MIN. H-BEAM SIZE	Type	HEB140	HEB220	HEA100	HEB260
LENGTH	mm	487	632	732	662
WIDTH	mm	240	330	330	330
HEIGHT	mm	310	479	479	484
OPENING	mm	20	40	30	40

2 DUPLEX

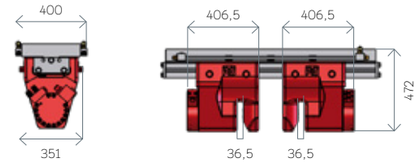

2 X 42 T

Clamping heads for concrete and wooden piles, dimater 190 to 1 000 mm.

DUPLEX		42 t
WEIGHT (WITH 1-METER BEAM)	kg	750
CLAMPING FORCE	kN	848
CLAMPING PRESSURE	bar	320



3 MULTIGRIP

60 T

For driving and extracting of concrete and wooden piles. Adapted to round and square piles.

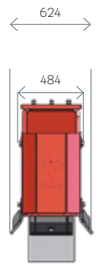

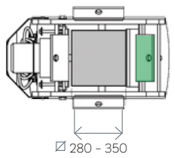

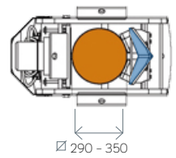

22 t	60 t	60 t EXTENDED		90 t
		POSTION 1	POSTION 2	
FRONT VUE				
TOP VUE				
SIDE VUE				

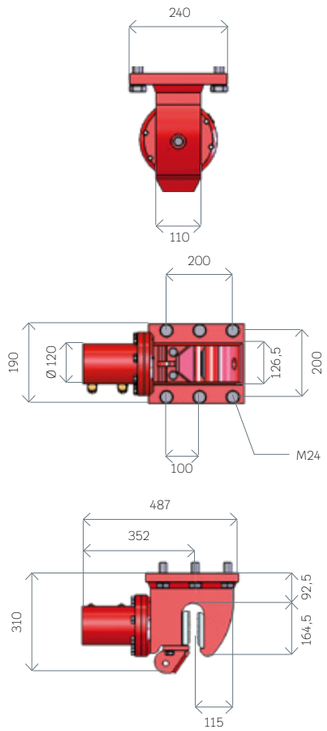

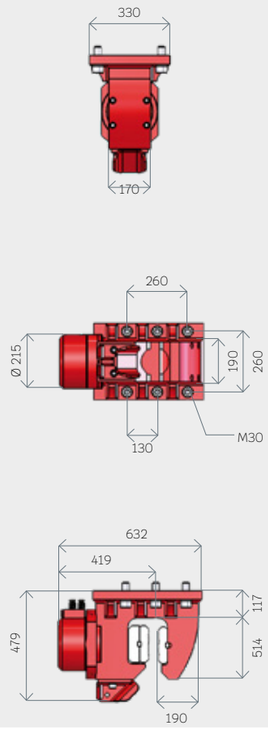

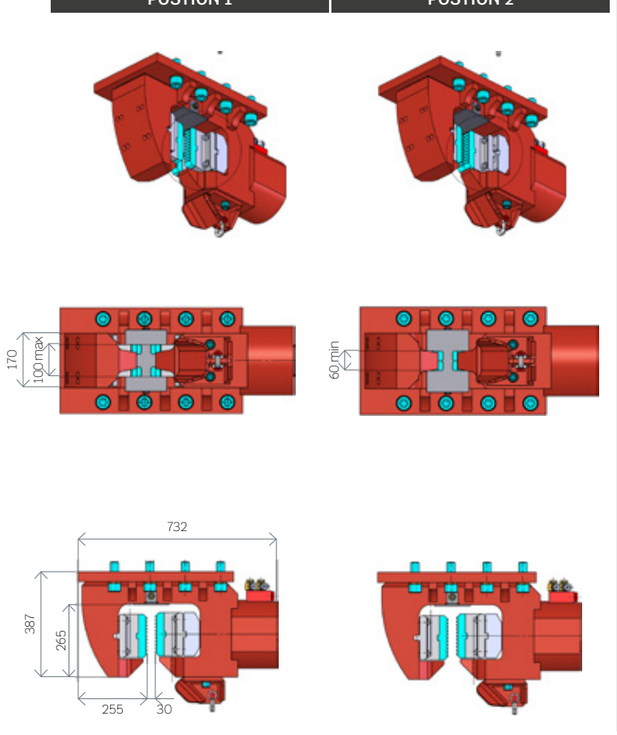

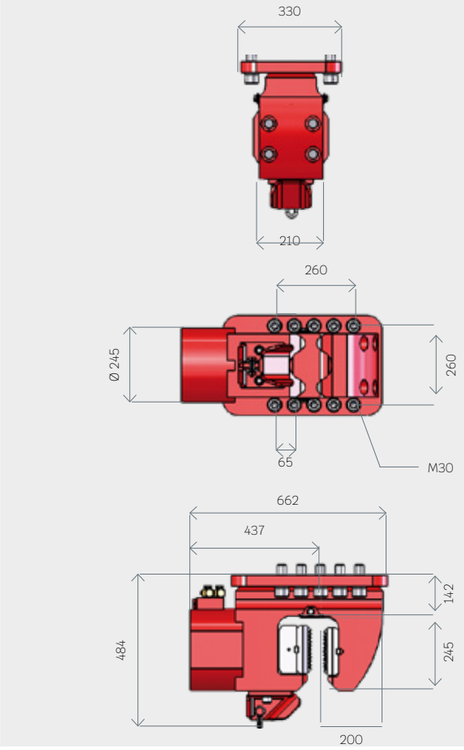

PTC has the right to modify this data at any given time.

CONTROL & CONNECTIONS

Two control options to allow for a perfect adaptation to available hydraulic circuits.

HYDRAULIC CONTROL

Vibrodriver controlled from the cabin using a single joystick.

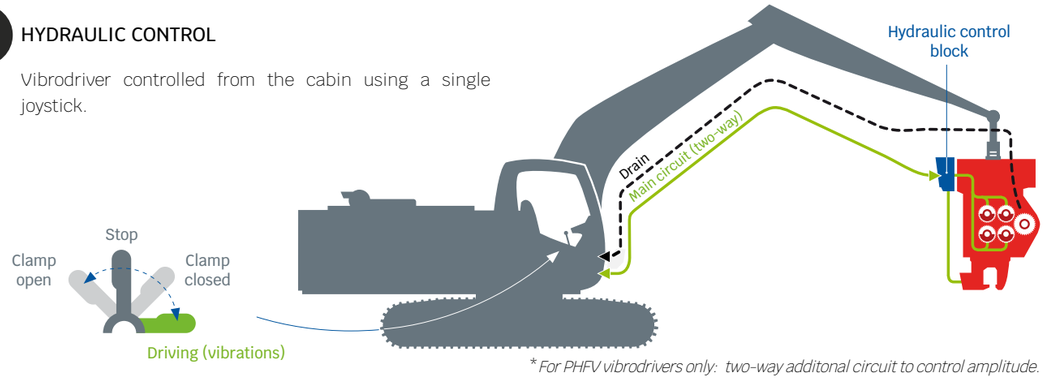

** For PHFV vibrodrivers only: two-way additonal circuit to control amplitude.*

FLOW LIMITOR*

The vibrodriver is controlled by two commands (joystick and pedal): one controls the clamp, the other the vibration.

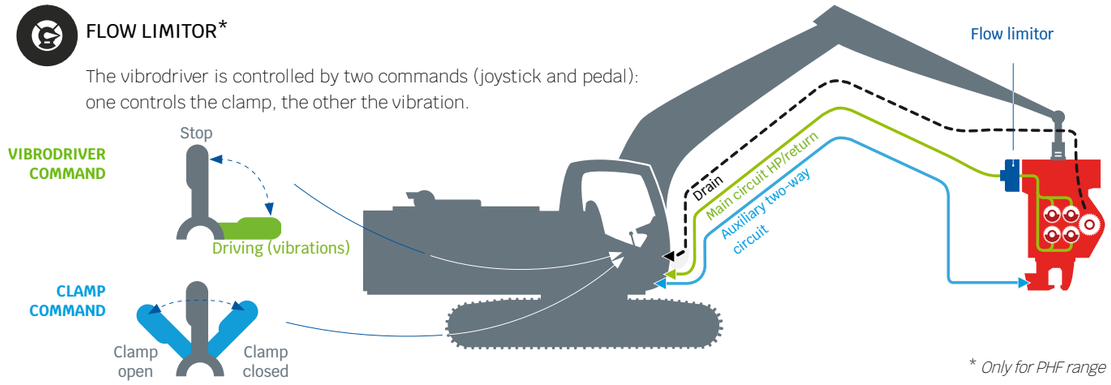

** Only for PHF range*

To obtain the best driving performance, it is key to choose the right excavator for the Vibrodriver (see table in page 5). You also need to be sure that your excavator is able to keep a constant flow when another excavator circuit is being used and also when pressure goes up to 300 bar.

HYDRAULIC CONTROL

Hydraulic control developped by PTC allows for vibrodriver control with one single joystick (vibration and clamp).

By opening the flow in the main circuit, the operator begins by closing the clamp, before starting vibration. Thus, the vibrodriver works 100% safely.

Only 1 circuit needed to power PHF vibrodrivers (+ 1 drain) :

Main circuit: two-way circulation flow.

2 circuits needed to power PHFV vibrodrivers:

Main circuit: two-way circulation flow.

Auxiliary two-way circuit: for Variable Moment system, which controls amplitude.

FLOW LIMITOR

Flow limitor ensures that vibrodriver admissible maximum flow is not exceeded. It thus guarantees optimum driving efficiency and protects the equipment.

2 circuits needed to power PHF vibrodrivers (+ 1 drain) :

Main circuit: for the flow limitor that controls the hydraulic motor (vibrations).

Auxiliary two-way circuit: for the clamp.

ACCESSORIES

Better adaptation to excavator and jobsite conditions.

1 FORK ATTACHMENT

The fork attachment allows easy mounting of the vibrodriver on the excavator boom. At customer request, PTC can customize the fork attachment to guarantee a perfect fitting.

For the customization, the client must provide the measurements of the excavator boom.

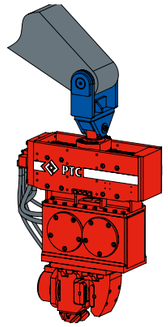





2 GOOSENECK STICK

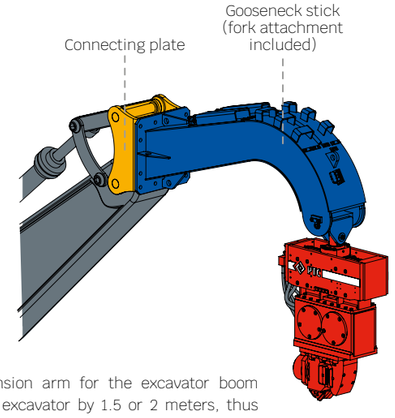

PTC has specially developped an extension arm for the excavator boom that increases the lifting height of the excavator by 1.5 or 2 meters, thus allowing driving of higher profiles.

The gooseneck stick is supplied with assembling pins and an fork attachment.

3 CHAIN

For safety reasons, a chain should be used to attach and secure the sheetpile to the vibrodriver. PTC supplies the chain with vibrodrivers equipped with Agriplex 22 t, 60 t and 90 t clamps.





4 STORAGE SUPPORT

The storage support is a useful accessory to save floor space on the jobsite and to avoid damages on your equipment.

PTC
56 rue de Neuilly
93136 Noisy-le-Sec
Cedex
France
Tel. : +33 (0)1 49 42 72 95
PTC_Service@fayatsas.onmicrosoft.com
ptc.fayat.com

PTC FAR EAST
3 Tuas Avenue 16
638926 Singapore
Singapore
Tel. : +65 6861 7977
Tel. : +65 6861 6338
commercial.fareast@ptc.fayat.com
ptc.fayat.com

PTC - Fayat Group

@PtcFayatGroup

@Ptc_Fayat

PTC FAYAT GROUP

CONTACT-US!

Non contractual document due to the continuous improvement policy of PTC (03/2025)

PTC FAYAT GROUP

MADE IN